# LM2524D/LM3524D Regulating Pulse Width Modulator

**Check for Samples: LM2524D, LM3524D**

## FEATURES

- **Fully Interchangeable With Standard LM3524 Family**
- **±1% Precision 5V Reference With Thermal Shut-Down**
- **Output Current to 200 mA DC**
- **60V Output Capability**
- **Wide Common Mode Input Range for Error-Amp**
- **One Pulse per Period (Noise Suppression)**
- **Improved Max. Duty Cycle at High Frequencies**
- **Double Pulse Suppression**
- **Synchronize Through Pin 3**

## DESCRIPTION

The LM3524D family is an improved version of the industry standard LM3524. It has improved specifications and additional features yet is pin for pin compatible with existing 3524 families. New features reduce the need for additional external circuitry often required in the original version.

The LM3524D has a ±1% precision 5V reference. The current carrying capability of the output drive transistors has been raised to 200 mA while reducing $V_{CEsat}$ and increasing $V_{CE}$ breakdown to 60V. The common mode voltage range of the error-amp has been raised to 5.5V to eliminate the need for a resistive divider from the 5V reference.

In the LM3524D the circuit bias line has been isolated from the shut-down pin. This prevents the oscillator pulse amplitude and frequency from being disturbed by shut-down. Also at high frequencies (≈300 kHz) the max. duty cycle per output has been improved to 44% compared to 35% max. duty cycle in other 3524s.

In addition, the LM3524D can now be synchronized externally, through pin 3. Also a latch has been added to insure one pulse per period even in noisy environments. The LM3524D includes double pulse suppression logic that insures when a shut-down condition is removed the state of the T-flip-flop will change only after the first clock pulse has arrived. This feature prevents the same output from being pulsed twice in a row, thus reducing the possibility of core saturation in push-pull designs.

### Connection Diagram

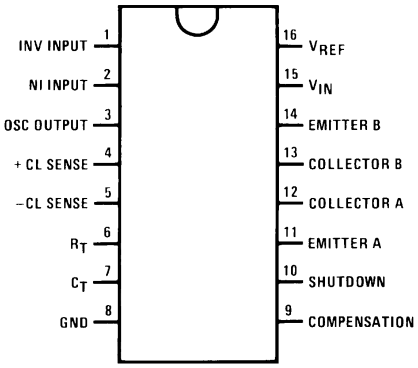


**Figure 1. Top View**
**See Package Number NFG**
**See Package Number D**

Please be aware that an important notice concerning availability, standard warranty, and use in critical applications of Texas Instruments semiconductor products and disclaimers thereto appears at the end of this data sheet.

All trademarks are the property of their respective owners.

PRODUCTION DATA information is current as of publication date. Products conform to specifications per the terms of the Texas Instruments standard warranty. Production processing does not necessarily include testing of all parameters.

Copyright © 2009–2013, Texas Instruments Incorporated

## Block Diagram

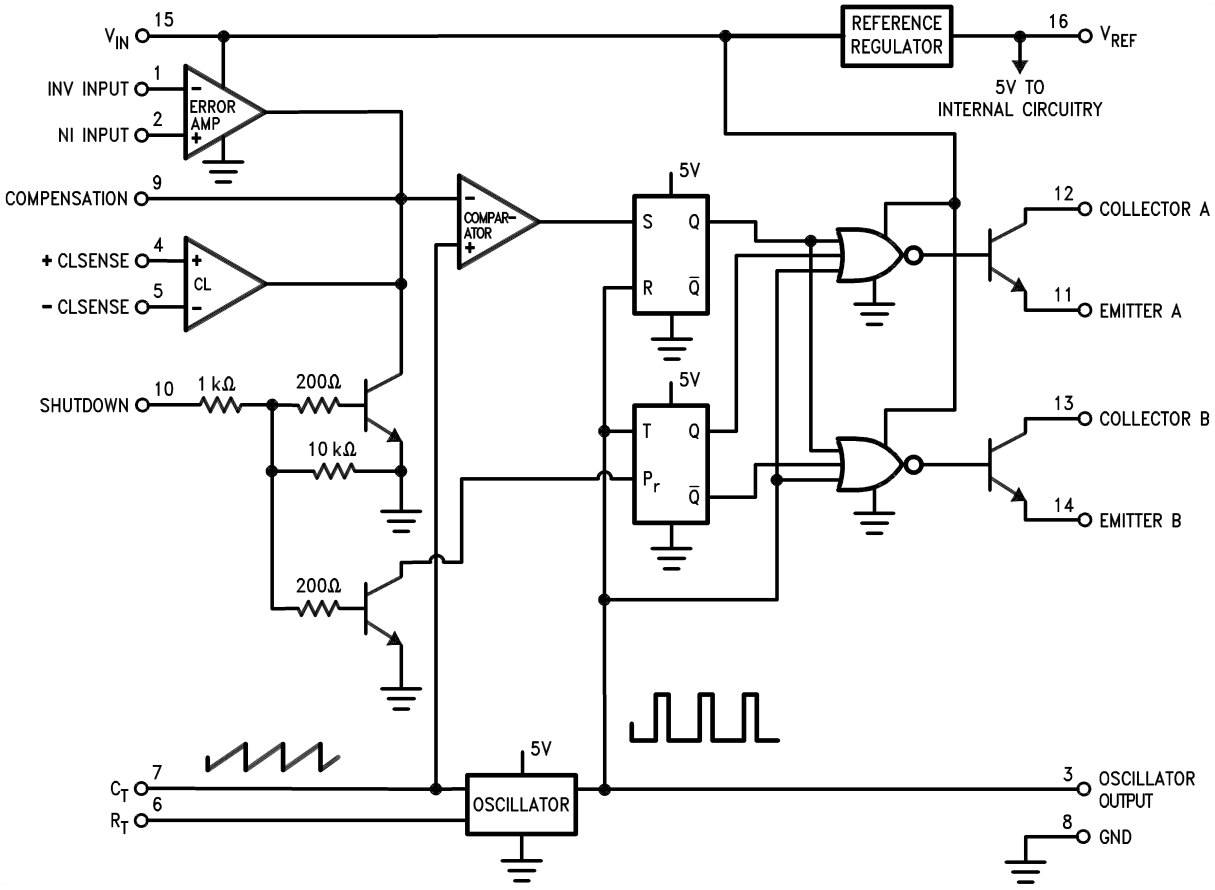



Copyright © 2009–2013, Texas Instruments Incorporated

These devices have limited built-in ESD protection. The leads should be shorted together or the device placed in conductive foam during storage or handling to prevent electrostatic damage to the MOS gates.

## Absolute Maximum Ratings(1)(2)

| | | |
|---|---|---|
| Supply Voltage | | 40V |
| Collector Supply Voltage | LM2524D | 55V |
| | LM3524D | 40V |
| Output Current DC (each) | | 200 mA |
| Oscillator Charging Current (Pin 7) | | 5 mA |
| Internal Power Dissipation | | 1W |
| Operating Junction Temperature Range (3) | LM2524D | −40°C to +125°C |
| | LM3524D | 0°C to +125°C |
| Maximum Junction Temperature | | 150° |
| Storage Temperature Range | | −65°C to +150°C |
| Lead Temperature (Soldering 4 sec.) | NFG, D Pkg. | 260°C |

(1) Absolute maximum ratings indicate limits beyond which damage to the device may occur. DC and AC electrical specifications do not apply when operating the device beyond its rated operating conditions.
(2) If Military/Aerospace specified devices are required, please contact the Texas Instruments Sales Office/Distributors for availability and specifications.
(3) For operation at elevated temperatures, devices in the NFG package must be derated based on a thermal resistance of 86°C/W, junction to ambient. Devices in the D package must be derated at 125°C/W, junction to ambient.

## Electrical Characteristics(1)

| Symbol | Parameter | Conditions | LM2524D | | | LM3524D | | | Units |
|---|---|---|---|---|---|---|---|---|---|
| | | | Typ | Tested Limit(2) | Design Limit(3) | Typ | Tested Limit(2) | Design Limit(3) | |
| **REFERENCE SECTION** | | | | | | | | | |
| $V_{REF}$ | Output Voltage | | 5 | 4.85 | **4.80** | 5 | 4.75 | | $V_{Min}$ |
| | | | | 5.15 | **5.20** | | 5.25 | | $V_{Max}$ |
| $V_{RLine}$ | Line Regulation | $V_{IN}$ = 8V to 40V | 10 | 15 | **30** | 10 | 25 | 50 | $mV_{Max}$ |
| $V_{RLoad}$ | Load Regulation | $I_L$ = 0 mA to 20 mA | 10 | 15 | **25** | 10 | 25 | 50 | $mV_{Max}$ |
| $\Delta V_{IN}/\Delta V_{REF}$ | Ripple Rejection | f = 120 Hz | 66 | | | 66 | | | dB |
| $I_{OS}$ | Short Circuit Current | $V_{REF}$ = 0 | | 25 | | | 25 | | mA Min |
| | | | 50 | | | 50 | | | |
| | | | | 180 | | | 200 | | mA Max |
| $N_O$ | Output Noise | 10 Hz ≤ f ≤ 10 kHz | 40 | | 100 | 40 | | 100 | $\mu V_{rms\ Max}$ |
| | Long Term Stability | $T_A$ = 125°C | 20 | | | 20 | | | mV/kHr |
| **OSCILLATOR SECTION** | | | | | | | | | |
| $f_{OSC}$ | Max. Freq. | $R_T$ = 1k, $C_T$ = 0.001 µF(4) | 550 | | 500 | 350 | | | $kHz_{Min}$ |
| $f_{OSC}$ | Initial Accuracy | $R_T$ = 5.6k, $C_T$ = 0.01 µF(4) | | 17.5 | | | 17.5 | | $kHz_{Min}$ |
| | | | 20 | | | 20 | | | |
| | | | | 22.5 | | | 22.5 | | $kHz_{Max}$ |
| | | $R_T$ = 2.7k, $C_T$ = 0.01 µF(4) | | 34 | | | 30 | | $kHz_{Min}$ |
| | | | 38 | | | 38 | | | |
| | | | | 42 | | | 46 | | $kHz_{Max}$ |

(1) Unless otherwise stated, these specifications apply for $T_A = T_J$ = 25°C. Boldface numbers apply over the rated temperature range: LM2524D is −40° to 85°C and LM3524D is 0°C to 70°C. $V_{IN}$ = 20V and $f_{OSC}$ = 20 kHz.
(2) Tested limits are ensured and 100% tested in production.
(3) Design limits are ensured (but not 100% production tested) over the indicated temperature and supply voltage range. These limits are not used to calculate outgoing quality level.
(4) The value of a $C_t$ capacitor can vary with frequency. Careful selection of this capacitor must be made for high frequency operation. Polystyrene was used in this test. NPO ceramic or polypropylene can also be used.

Copyright © 2009–2013, Texas Instruments Incorporated

## Electrical Characteristics[1] (continued)

| Symbol | Parameter | Conditions | LM2524D | | | LM3524D | | | Units |
|---|---|---|---|---|---|---|---|---|---|
| | | | Typ | Tested Limit[2] | Design Limit[3] | Typ | Tested Limit[2] | Design Limit[3] | |
| $\Delta f_{OSC}$ | Freq. Change with $V_{IN}$ | $V_{IN}$ = 8 to 40V | 0.5 | 1 | | 0.5 | 1.0 | | $\%_{Max}$ |
| $\Delta f_{OSC}$ | Freq. Change with Temp. | $T_A$ = −55°C to +125°C at 20 kHz $R_T$ = 5.6k, $C_T$ = 0.01 µF | 5 | | | 5 | | | % |
| $V_{OSC}$ | Output Amplitude (Pin 3) (5) | $R_T$ = 5.6k, $C_T$ = 0.01 µF | 3 | 2.4 | | 3 | 2.4 | | $V_{Min}$ |
| $t_{PW}$ | Output Pulse Width (Pin 3) | $R_T$ = 5.6k, $C_T$ = 0.01 µF | 0.5 | 1.5 | | 0.5 | 1.5 | | $\mu s_{Max}$ |
| | Sawtooth Peak Voltage | $R_T$ = 5.6k, $C_T$ = 0.01 µF | 3.4 | 3.6 | **3.8** | | 3.8 | | $V_{Max}$ |
| | Sawtooth Valley Voltage | $R_T$ = 5.6k, $C_T$ = 0.01 µF | 1.1 | 0.8 | **0.6** | | 0.6 | | $V_{Min}$ |
| **ERROR-AMP SECTION** | | | | | | | | | |
| $V_{IO}$ | Input Offset Voltage | $V_{CM}$ = 2.5V | 2 | 8 | **10** | 2 | 10 | | $mV_{Max}$ |
| $I_{IB}$ | Input Bias Current | $V_{CM}$ = 2.5V | 1 | 8 | **10** | 1 | 10 | | $\mu A_{Max}$ |
| $I_{IO}$ | Input Offset Current | $V_{CM}$ = 2.5V | 0.5 | 1.0 | **1** | 0.5 | 1 | | $\mu A_{Max}$ |
| $I_{COSI}$ | Compensation Current (Sink) | $V_{IN(I)} - V_{IN(NI)}$ = 150 mV | | 65 | | | 65 | | $\mu A_{Min}$ |
| | | | 95 | | | 95 | | | |
| | | | | 125 | | | 125 | | $\mu A_{Max}$ |
| $I_{COSO}$ | Compensation Current (Source) | $V_{IN(NI)} - V_{IN(I)}$ = 150 mV | | −125 | | | −125 | | $\mu A_{Min}$ |
| | | | −95 | | | −95 | | | |
| | | | | −65 | | | −65 | | $\mu A_{Max}$ |
| $A_{VOL}$ | Open Loop Gain | $R_L$ = ∞, $V_{CM}$ = 2.5 V | 80 | 74 | **60** | 80 | 70 | 60 | $dB_{Min}$ |
| VCMR | Common Mode Input Voltage Range | | | 1.5 | **1.4** | | 1.5 | | $V_{Min}$ |
| | | | | 5.5 | **5.4** | | 5.5 | | $V_{Max}$ |
| CMRR | Common Mode Rejection Ratio | | 90 | 80 | | 90 | 80 | | $dB_{Min}$ |
| $G_{BW}$ | Unity Gain Bandwidth | $A_{VOL}$ = 0 dB, $V_{CM}$ = 2.5V | 3 | | | 2 | | | MHz |
| $V_O$ | Output Voltage Swing | $R_L$ = ∞ | | 0.5 | | | 0.5 | | $V_{Min}$ |
| | | | | 5.5 | | | 5.5 | | $V_{Max}$ |
| PSRR | Power Supply Rejection Ratio | $V_{IN}$ = 8 to 40V | 80 | | 70 | 80 | 65 | | $db_{Min}$ |
| **COMPARATOR SECTION** | | | | | | | | | |
| $t_{ON}/t_{OSC}$ | Minimum Duty Cycle | Pin 9 = 0.8V, [$R_T$ = 5.6k, $C_T$ = 0.01 µF] | 0 | 0 | | 0 | 0 | | $\%_{Max}$ |
| $t_{ON}/t_{OSC}$ | Maximum Duty Cycle | Pin 9 = 3.9V, [$R_T$ = 5.6k, $C_T$ = 0.01 µF] | 49 | 45 | | 49 | 45 | | $\%_{Min}$ |
| $t_{ON}/t_{OSC}$ | Maximum Duty Cycle | Pin 9 = 3.9V, [$R_T$ = 1k, $C_T$ = 0.001 µF] | 44 | 35 | | 44 | 35 | | $\%_{Min}$ |
| $V_{COMPZ}$ | Input Threshold | Zero Duty Cycle | 1 | | | 1 | | | V |
| | (Pin 9) | | | | | | | | |
| $V_{COMPM}$ | Input Threshold (Pin 9) | Maximum Duty Cycle | 3.5 | | | 3.5 | | | V |
| $I_{IB}$ | Input Bias Current | | −1 | | | −1 | | | µA |
| **CURRENT LIMIT SECTION** | | | | | | | | | |
| $V_{SEN}$ | Sense Voltage | $V_{(Pin\ 2)} - V_{(Pin\ 1)} \geq 150$ mV | | 180 | | | 180 | | $mV_{Min}$ |
| | | | 200 | | | 200 | | | |
| | | | | 220 | | | 220 | | $mV_{Max}$ |
| TC-$V_{sense}$ | Sense Voltage T.C. | | 0.2 | | | 0.2 | | | mV/°C |
| | Common Mode Voltage Range | $V_5 - V_4$ = 300 mV | −0.7 | | | −0.7 | | | $V_{Min}$ |
| | | | 1 | | | 1 | | | $V_{Max}$ |

(5) OSC amplitude is measured open circuit. Available current is limited to 1 mA so care must be exercised to limit capacitive loading of fast pulses.


Copyright © 2009–2013, Texas Instruments Incorporated

## Electrical Characteristics[1] (continued)

| Symbol | Parameter | Conditions | LM2524D | | | LM3524D | | | Units |
|---|---|---|---|---|---|---|---|---|---|
| | | | Typ | Tested Limit[2] | Design Limit[3] | Typ | Tested Limit[2] | Design Limit[3] | |
| **SHUT DOWN SECTION** | | | | | | | | | |
| $V_{SD}$ | High Input Voltage | $V_{(Pin\ 2)} - V_{(Pin\ 1)} \geq 150$ mV | 1 | 0.5 | | 1 | 0.5 | | $V_{Min}$ |
| | | | | 1.5 | | | 1.5 | | $V_{Max}$ |
| $I_{SD}$ | High Input Current | $I_{(pin\ 10)}$ | 1 | | | 1 | | | mA |
| **OUTPUT SECTION (EACH OUTPUT)** | | | | | | | | | |
| $V_{CES}$ | Collector Emitter Voltage Breakdown | $I_C \leq 100$ µA | | 55 | | | 40 | | $V_{Min}$ |
| $I_{CES}$ | Collector Leakage Current | $V_{CE} = 60V$ | | | | | | | |
| | | $V_{CE} = 55V$ | 0.1 | 50 | | | | | $\mu A_{Max}$ |
| | | $V_{CE} = 40V$ | | | | 0.1 | 50 | | |
| $V_{CESAT}$ | Saturation Voltage | $I_E = 20$ mA | 0.2 | 0.5 | | 0.2 | 0.7 | | $V_{Max}$ |
| | | $I_E = 200$ mA | 1.5 | 2.2 | | 1.5 | 2.5 | | |
| $V_{EO}$ | Emitter Output Voltage | $I_E = 50$ mA | 18 | 17 | | 18 | 17 | | $V_{Min}$ |
| $t_R$ | Rise Time | $V_{IN} = 20V$, $I_E = -250$ µA $R_C = 2k$ | 200 | | | 200 | | | ns |
| $t_F$ | Fall Time | $R_C = 2k$ | 100 | | | 100 | | | ns |
| **SUPPLY CHARACTERISTICS SECTION** | | | | | | | | | |
| $V_{IN}$ | Input Voltage Range | After Turn-on | | 8 | | | 8 | | $V_{Min}$ |
| | | | | 40 | | | 40 | | $V_{Max}$ |
| T | Thermal Shutdown Temp. | [6] | 160 | | | 160 | | | °C |
| $I_{IN}$ | Stand By Current | $V_{IN} = 40V$[7] | 5 | 10 | | 5 | 10 | | mA |

(6) For operation at elevated temperatures, devices in the NFG package must be derated based on a thermal resistance of 86°C/W, junction to ambient. Devices in the D package must be derated at 125°C/W, junction to ambient.
(7) Pins 1, 4, 7, 8, 11, and 14 are grounded; Pin 2 = 2V. All other inputs and outputs open.

Copyright © 2009–2013, Texas Instruments Incorporated

## Typical Performance Characteristics

**Switching Transistor Peak Output Current vs Temperature**

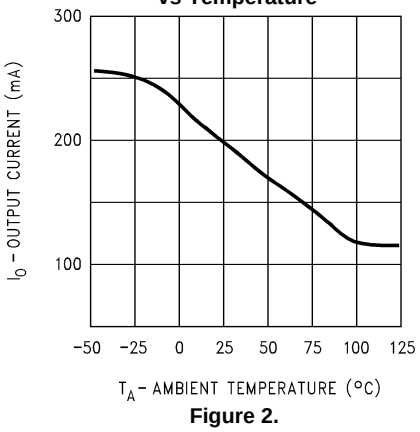


**Figure 2.**

**Maximum Average Power Dissipation (NFG, D Packages)**

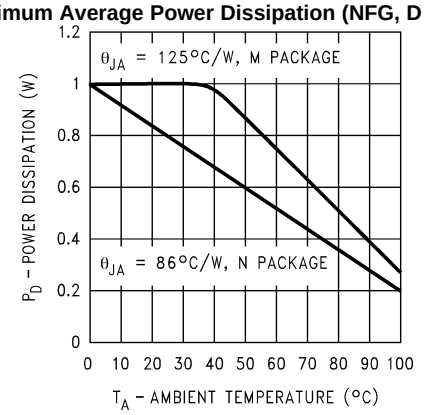


**Figure 3.**

**Maximum & Minimum Duty Cycle Threshold Voltage**

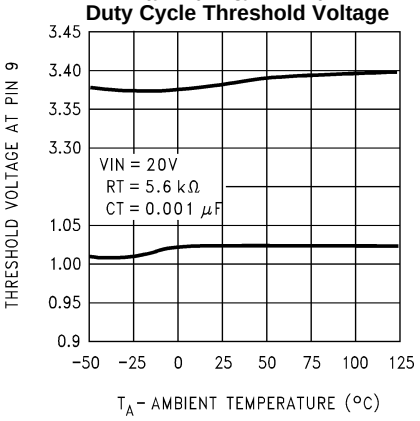


**Figure 4.**

**Output Transistor Saturation Voltage**

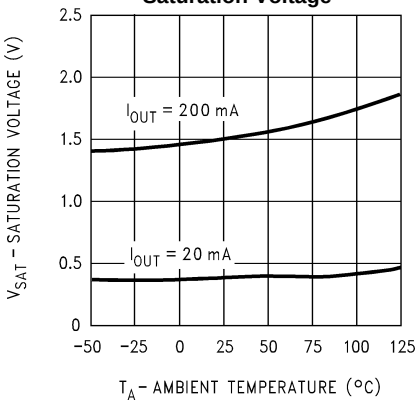


**Figure 5.**

**Output Transistor Emitter Voltage**

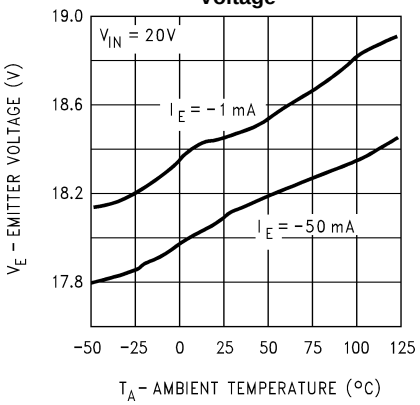


**Figure 6.**

**Reference Transistor Peak Output Current**

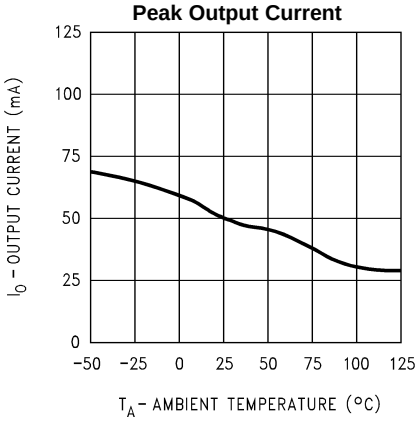


**Figure 7.**


Copyright © 2009–2013, Texas Instruments Incorporated

## Typical Performance Characteristics (continued)

**Standby Current vs Voltage**

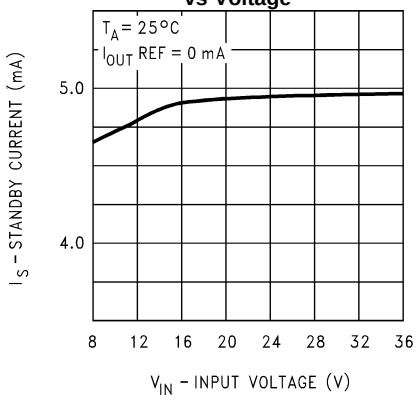


**Figure 8.**

**Standby Current vs Temperature**

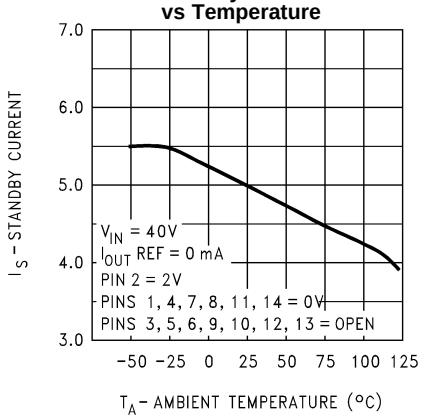


**Figure 9.**

**Current Limit Sense Voltage**

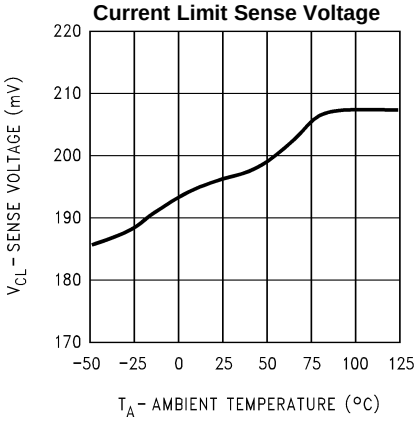


**Figure 10.**

## TEST CIRCUIT

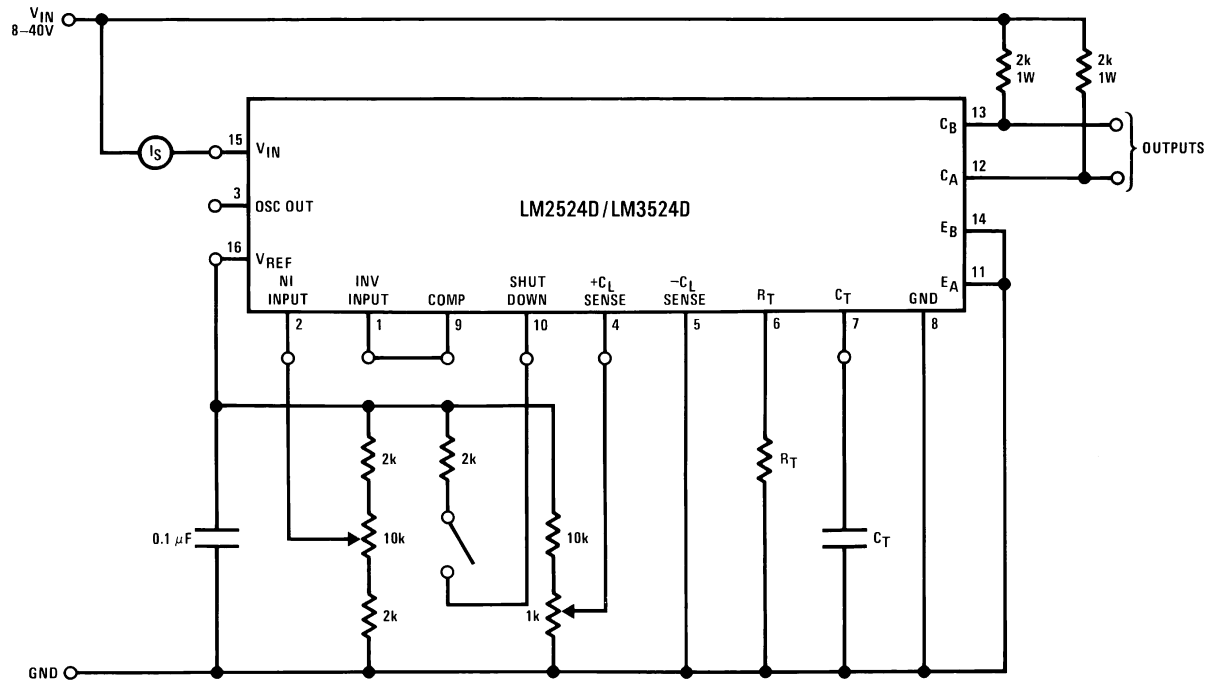



Copyright © 2009–2013, Texas Instruments Incorporated

## Functional Description

### Internal Voltage Regulator

The LM3524D has an on-chip 5V, 50 mA, short circuit protected voltage regulator. This voltage regulator provides a supply for all internal circuitry of the device and can be used as an external reference.

For input voltages of less than 8V the 5V output should be shorted to pin 15, $V_{IN}$, which disables the 5V regulator. With these pins shorted the input voltage must be limited to a maximum of 6V. If input voltages of 6V–8V are to be used, a pre-regulator, as shown in Figure 11, must be added.

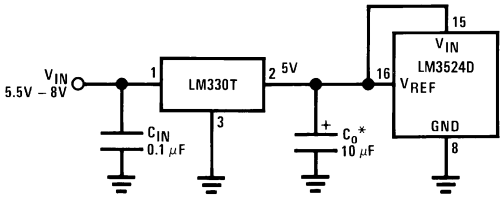


*Minimum $C_O$ of 10 μF required for stability.

**Figure 11.**

### Oscillator

The LM3524D provides a stable on-board oscillator. Its frequency is set by an external resistor, $R_T$ and capacitor, $C_T$. A graph of $R_T$, $C_T$ vs oscillator frequency is shown is Figure 12. The oscillator's output provides the signals for triggering an internal flip-flop, which directs the PWM information to the outputs, and a blanking pulse to turn off both outputs during transitions to ensure that cross conduction does not occur. The width of the blanking pulse, or dead time, is controlled by the value of $C_T$, as shown in Figure 13. The recommended values of $R_T$ are 1.8 kΩ to 100 kΩ, and for $C_T$, 0.001 μF to 0.1 μF.

If two or more LM3524D's must be synchronized together, the easiest method is to interconnect all pin 3 terminals, tie all pin 7's (together) to a single $C_T$, and leave all pin 6's open except one which is connected to a single $R_T$. This method works well unless the LM3524D's are more than 6″ apart.

A second synchronization method is appropriate for any circuit layout. One LM3524D, designated as master, must have its $R_TC_T$ set for the correct period. The other slave LM3524D(s) should each have an $R_TC_T$ set for a 10% longer period. All pin 3's must then be interconnected to allow the master to properly reset the slave units.

The oscillator may be synchronized to an external clock source by setting the internal free-running oscillator frequency 10% slower than the external clock and driving pin 3 with a pulse train (approx. 3V) from the clock. Pulse width should be greater than 50 ns to insure full synchronization.

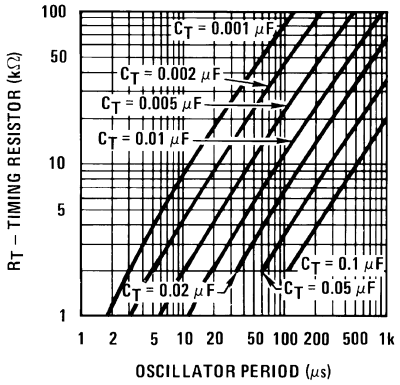


**Figure 12.**

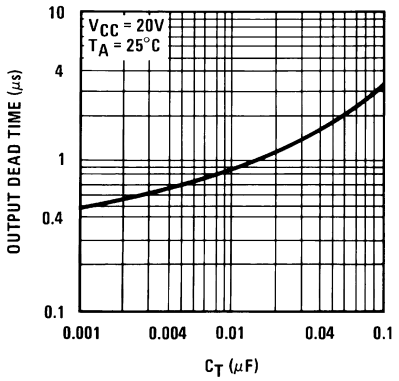


**Figure 13.**

## Error Amplifier

The error amplifier is a differential input, transconductance amplifier. Its gain, nominally 86 dB, is set by either feedback or output loading. This output loading can be done with either purely resistive or a combination of resistive and reactive components. A graph of the amplifier's gain vs output load resistance is shown in Figure 14.

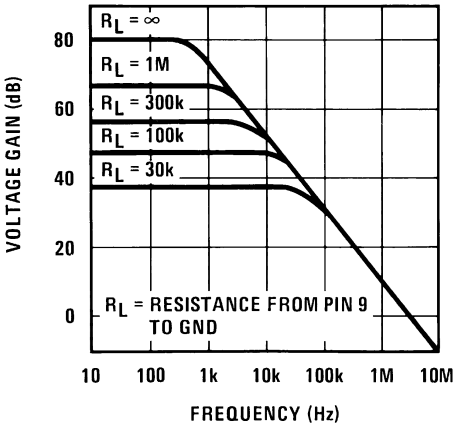


**Figure 14.**

The output of the amplifier, or input to the pulse width modulator, can be overridden easily as its output impedance is very high ($Z_O \cong 5$ MΩ). For this reason a DC voltage can be applied to pin 9 which will override the error amplifier and force a particular duty cycle to the outputs. An example of this could be a non-regulating motor speed control where a variable voltage was applied to pin 9 to control motor speed. A graph of the output duty cycle vs the voltage on pin 9 is shown in Figure 15.

The duty cycle is calculated as the percentage ratio of each output's ON-time to the oscillator period. Paralleling the outputs doubles the observed duty cycle.


Copyright © 2009–2013, Texas Instruments Incorporated

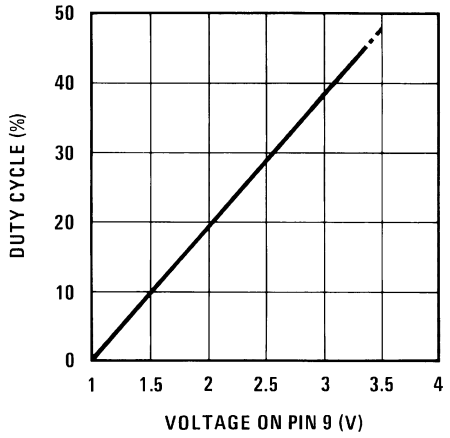


**Figure 15.**

The amplifier's inputs have a common-mode input range of 1.5V–5.5V. The on board regulator is useful for biasing the inputs to within this range.

## Current Limiting

The function of the current limit amplifier is to override the error amplifier's output and take control of the pulse width. The output duty cycle drops to about 25% when a current limit sense voltage of 200 mV is applied between the $+C_L$ and $-C_L$sense terminals. Increasing the sense voltage approximately 5% results in a 0% output duty cycle. Care should be taken to ensure the −0.7V to +1.0V input common-mode range is not exceeded.

In most applications, the current limit sense voltage is produced by a current through a sense resistor. The accuracy of this measurement is limited by the accuracy of the sense resistor, and by a small offset current, typically 100 µA, flowing from +CL to −CL.

## Output Stages

The outputs of the LM3524D are NPN transistors, capable of a maximum current of 200 mA. These transistors are driven 180° out of phase and have non-committed open collectors and emitters as shown in Figure 16.

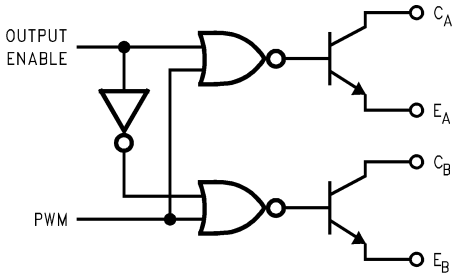


**Figure 16.**

Copyright © 2009–2013, Texas Instruments Incorporated

## Typical Applications

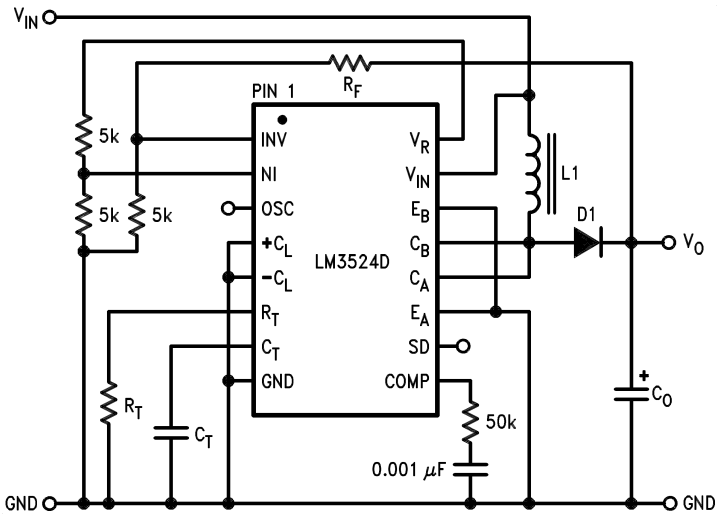


**Figure 17. Positive Regulator, Step-Up Basic Configuration ($I_{IN(MAX)}$ = 80 mA)**

**Design Equations**

$$R_F = 5k\left(\frac{V_o}{2.5} - 1\right)$$

$$f_{OSC} \cong \frac{1}{R_T C_T}$$

$$L1 = \frac{2.5 V_{IN}^2 (V_o - V_{IN})}{f_{OSC} I_o V_o^2}$$

$$C_o = \frac{I_o (V_o - V_{IN})}{f_{OSC} \Delta V_o V_o}$$

$$I_{o(MAX)} = I_{IN} \frac{V_{IN}}{V_o} \quad (1)$$

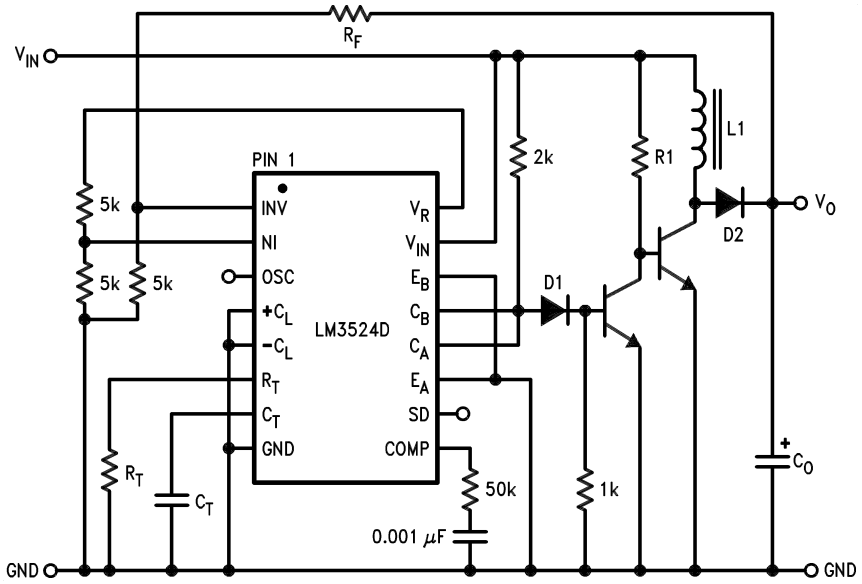


**Figure 18. Positive Regulator, Step-Up Boosted Current Configuration**


Copyright © 2009–2013, Texas Instruments Incorporated

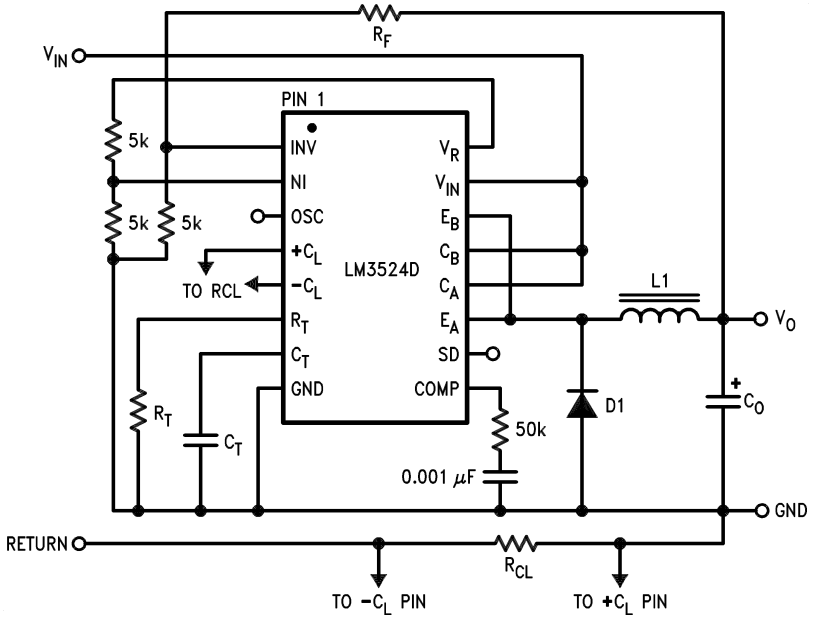


**Figure 19. Positive Regulator, Step-Down Basic Configuration ($I_{IN(MAX)}$ = 80 mA)**

**Design Equations**

$$R_F = 5\ k\Omega \left(\frac{V_o}{2.5} - 1\right)$$

$$R_{CL} = \frac{\text{Current Limit Sense Volt}}{I_{o(MAX)}}$$

$$f_{OSC} \cong \frac{1}{R_T C_T}$$

$$L1 = \frac{2.5 V_o (V_{IN} - V_o)}{I_o V_{IN} f_{OSC}}$$

$$C_o = \frac{(V_{IN} - V_o) V_o T^2}{8 \Delta V_o V_{IN} L1}$$

$$I_{o(MAX)} = I_{IN} \frac{V_{IN}}{V_o}$$

(2)

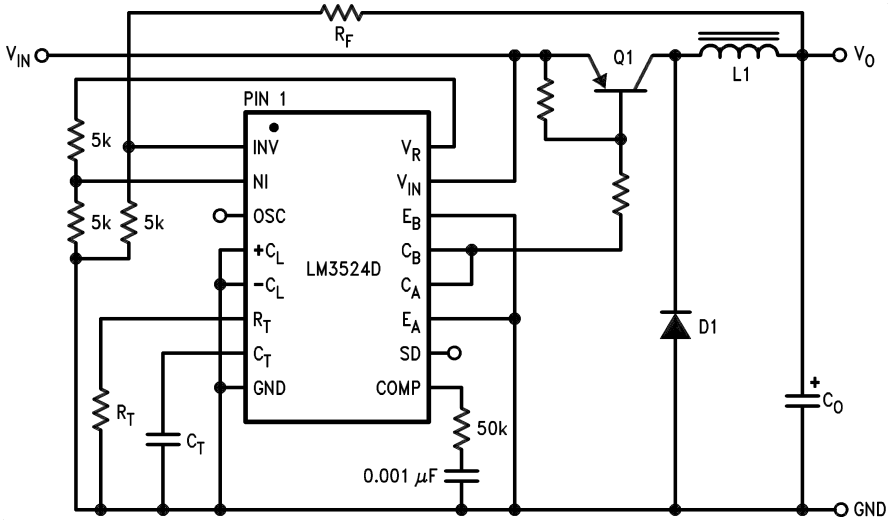


**Figure 20. Positive Regulator, Step-Down Boosted Current Configuration**

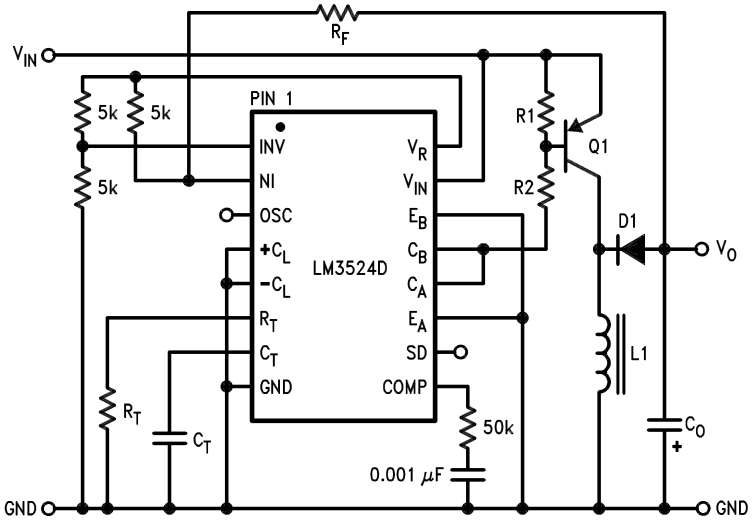


**Figure 21. Boosted Current Polarity Inverter**

**Design Equations**

$$R_F = 5k\left(1 - \frac{V_o}{2.5}\right)$$

$$f_{OSC} \cong \frac{1}{R_T C_T}$$

$$L1 = \frac{2.5 V_{IN}\, V_o}{f_{OSC}\,(V_o + V_{IN})\, I_o}$$

$$C_o = \frac{I_o V_o}{\Delta V_o\, f_{OSC}\,(V_o + V_{IN})} \quad (3)$$

## Basic Switching Regulator Theory and Applications

The basic circuit of a step-down switching regulator circuit is shown in Figure 22, along with a practical circuit design using the LM3524D in Figure 25.

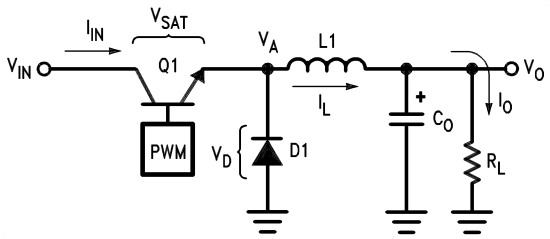


**Figure 22. Basic Step-Down Switching Regulator**

The circuit works as follows: Q1 is used as a switch, which has ON and OFF times controlled by the pulse width modulator. When Q1 is ON, power is drawn from $V_{IN}$ and supplied to the load through L1; $V_A$ is at approximately $V_{IN}$, D1 is reverse biased, and $C_o$ is charging. When Q1 turns OFF the inductor L1 will force $V_A$ negative to keep the current flowing in it, D1 will start conducting and the load current will flow through D1 and L1. The voltage at $V_A$is smoothed by the L1, $C_o$ filter giving a clean DC output. The current flowing through L1 is equal to the nominal DC load current plus some $\Delta I_L$ which is due to the changing voltage across it. *A good rule of thumb is to set* $\Delta I_{LP\text{-}P} \cong 40\% \times I_o$.


Copyright © 2009–2013, Texas Instruments Incorporated

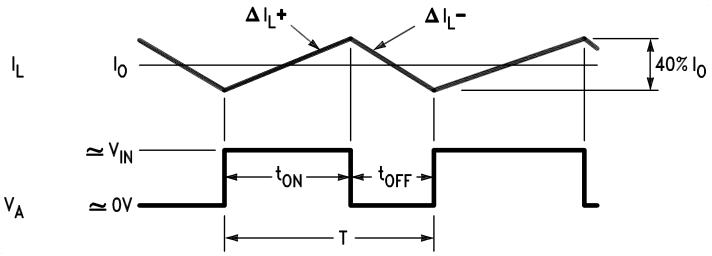


**Figure 23. Relation of Switch Timing to Inductor Current in Step-Down Regulator**

$$\text{From the relation } V_L = L\frac{d_i}{d_t},\ \Delta I_L \cong \frac{V_L T}{L1}$$

$$\Delta I_L^{+} = \frac{(V_{IN} - V_o)\, t_{ON}}{L1};\ \Delta I_L^{-} = \frac{V_o\, t_{OFF}}{L1} \tag{4}$$

Neglecting $V_{SAT}$, $V_D$, and settling $\Delta I_L^{+} = \Delta I_L^{-}$;

$$\boxed{V_o \cong V_{IN}\left(\frac{t_{ON}}{t_{OFF} + t_{ON}}\right)} = V_{IN}\left(\frac{t_{ON}}{T}\right); \tag{5}$$

where T = Total Period

The above shows the relation between $V_{IN}$, $V_o$ and duty cycle.

$$I_{IN(DC)} = I_{OUT(DC)}\left(\frac{t_{ON}}{t_{ON} + t_{OFF}}\right), \tag{6}$$

as Q1 only conducts during $t_{ON}$.

$$P_{IN} = I_{IN(DC)}\, V_{IN} = (I_{o(DC)})\left(\frac{t_{ON}}{t_{ON} + t_{OFF}}\right) V_{IN}$$

$$P_o = I_o V_o \tag{7}$$

The efficiency, η, of the circuit is:

$$\eta MAX = \frac{P_o}{P_{IN}} = \frac{I_o V_o}{I_o \frac{(t_{ON})}{T} V_{IN} + \frac{(V_{SAT}\, t_{ON} + V_{D1} t_{OFF})}{T} I_o}$$

$$= \boxed{\frac{V_o}{V_o + 1}} \text{ for } V_{SAT} = V_{D1} = 1V. \tag{8}$$

ηMAX will be further decreased due to switching losses in Q1. For this reason Q1 should be selected to have the maximum possible $f_T$, which implies very fast rise and fall times.

### Calculating Inductor L1

$$t_{ON} \cong \frac{(\Delta I_L^{+}) \times L1}{(V_{IN} - V_o)},\ t_{OFF} = \frac{(\Delta I_L^{-}) \times L1}{V_o}$$

$$t_{ON} + t_{OFF} = T = \frac{(\Delta I_L^{+}) \times L1}{(V_{IN} - V_Q)} + \frac{(\Delta I_L^{-}) \times L1}{V_o}$$

$$= \frac{0.4 I_o L1}{(V_{IN} - V_o)} + \frac{0.4 I_o L1}{V_o} \tag{9}$$

Since $\Delta I_L{+} = \Delta I_L^{-} = 0.4 I_o$

Solving the above for L1

$$L1 = \frac{2.5\ V_o\ (V_{IN} - V_o)}{I_o\ V_{IN}\ f} \tag{10}$$

where: L1 is in Henrys

f is switching frequency in Hz

Also, see LM1578 data sheet for graphical methods of inductor selection.

### Calculating Output Filter Capacitor $C_o$

Figure 23 shows L1's current with respect to Q1's $t_{ON}$ and $t_{OFF}$ times ($V_A$ is at the collector of Q1). This curent must flow to the load and $C_o$. $C_o$'s current will then be the difference between $I_L$, and $I_o$.

$$Ic_o = I_L - I_o \tag{11}$$

From Figure 23 it can be seen that current will be flowing into $C_o$ for the second half of $t_{ON}$ through the first half of $t_{OFF}$, or a time, $t_{ON}/2 + t_{OFF}/2$. The current flowing for this time is $\Delta I_L/4$. The resulting $\Delta V_c$ or $\Delta V_o$ is described by:

$$\Delta V_{op\text{-}p} = \frac{1}{C} \times \frac{\Delta I_L}{4} \times \left(\frac{t_{ON}}{2} + \frac{t_{OFF}}{2}\right)$$

$$= \frac{\Delta I_L}{4C}\left(\frac{t_{ON} + t_{OFF}}{2}\right)$$

$$\text{Since } \Delta I_L = \frac{V_o(T - t_{ON})}{L1} \text{ and } t_{ON} = \frac{V_o T}{V_{IN}}$$

$$\Delta V_{op\text{-}p} = \frac{V_o\left(T - \frac{V_o T}{V_{IN}}\right)}{4C\ L1}\left(\frac{T}{2}\right) = \frac{(V_{IN} - V_o)\ V_o T^2}{8 V_{IN} C_o L1} \text{ or}$$

$$\boxed{C_o = \frac{(V_{IN} - V_o)\ V_o\ T^2}{8 \Delta V_o V_{IN} L1}}$$

where: C is in farads, T is $\frac{1}{\text{switching frequency}}$

$\Delta V_o$ is p-p output ripple

(12)

For best regulation, the inductor's current cannot be allowed to fall to zero. Some minimum load current $I_o$, and thus inductor current, is required as shown below:

$$I_{o(MIN)} = \frac{(V_{IN} - V_o)\ t_{ON}}{2L1} = \boxed{\frac{(V_{IN} - V_o)\ V_o}{2 f V_{IN} L1}} \tag{13}$$

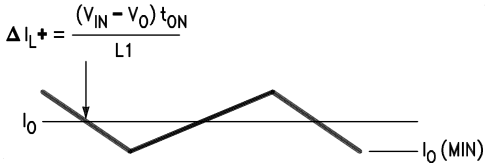


**Figure 24. Inductor Current Slope in Step-Down Regulator**

A complete step-down switching regulator schematic, using the LM3524D, is illustrated in Figure 25. Transistors Q1 and Q2 have been added to boost the output to 1A. The 5V regulator of the LM3524D has been divided in half to bias the error amplifier's non-inverting input to within its common-mode range. Since each output transistor is on for half the period, actually 45%, they have been paralleled to allow longer possible duty cycle, up to 90%. This makes a lower possible input voltage. The output voltage is set by:

$$V_o = V_{NI}\left(1 + \frac{R1}{R2}\right), \tag{14}$$

where $V_{NI}$ is the voltage at the error amplifier's non-inverting input.


Copyright © 2009–2013, Texas Instruments Incorporated

Resistor R3 sets the current limit to:

$$\frac{200\ mV}{R3} = \frac{200\ mV}{0.15} = 1.3A. \tag{15}$$

Figure 26 and Figure 27 show a PC board layout and stuffing diagram for the 5V, 1A regulator of Figure 25. The regulator's performance is listed in Table 1.

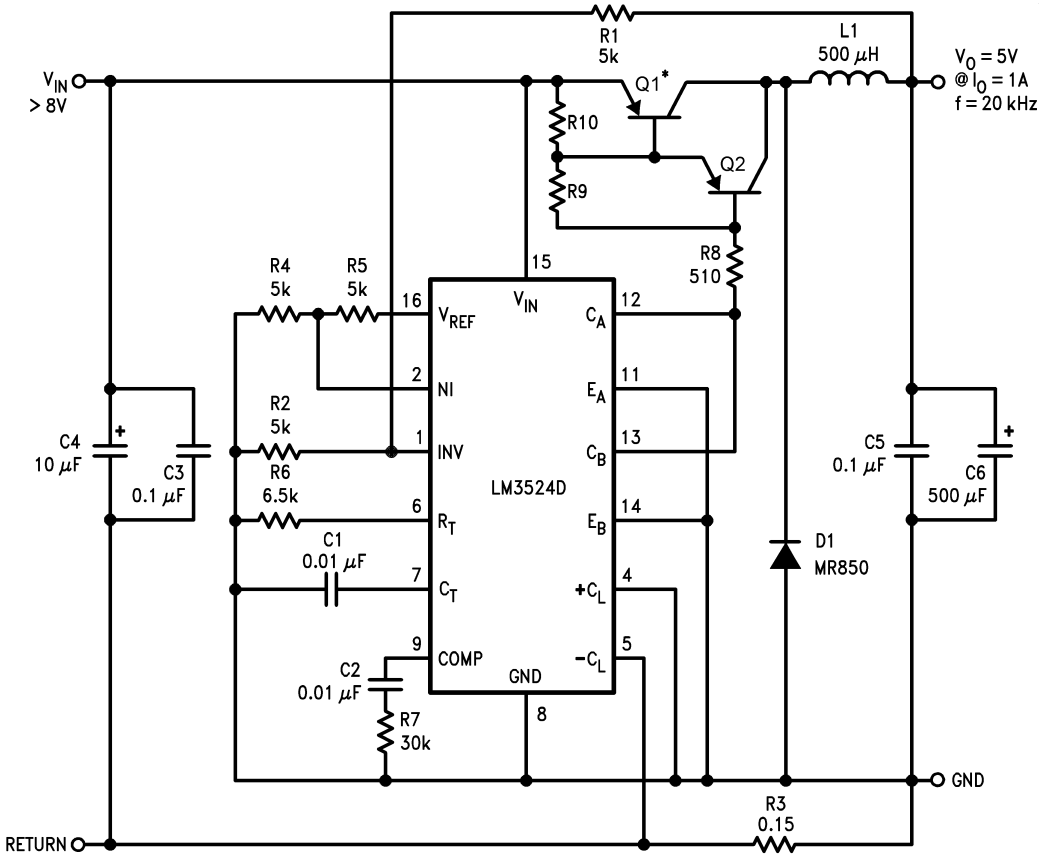


*Mounted to Staver Heatsink No. V5-1.
Q1 = BD344
Q2 = 2N5023
L1 = >40 turns No. 22 wire on Ferroxcube No. K300502 Torroid core.

**Figure 25. 5V, 1 Amp Step-Down Switching Regulator**

**Table 1.**

| Parameter | Conditions | Typical Characteristics |
|---|---|---|
| Output Voltage | $V_{IN}$ = 10V, $I_o$ = 1A | 5V |
| Switching Frequency | $V_{IN}$ = 10V, $I_o$ = 1A | 20 kHz |
| Short Circuit Current Limit | $V_{IN}$ = 10V | 1.3A |
| Load Regulation | $V_{IN}$ = 10V<br>$I_o$ = 0.2 − 1A | 3 mV |
| Line Regulation | $\Delta V_{IN}$ = 10 − 20V,<br>$I_o$ = 1A | 6 mV |
| Efficiency | $V_{IN}$ = 10V, $I_o$ = 1A | 80% |
| Output Ripple | $V_{IN}$ = 10V, $I_o$ = 1A | 10 mVp-p |

Copyright © 2009–2013, Texas Instruments Incorporated

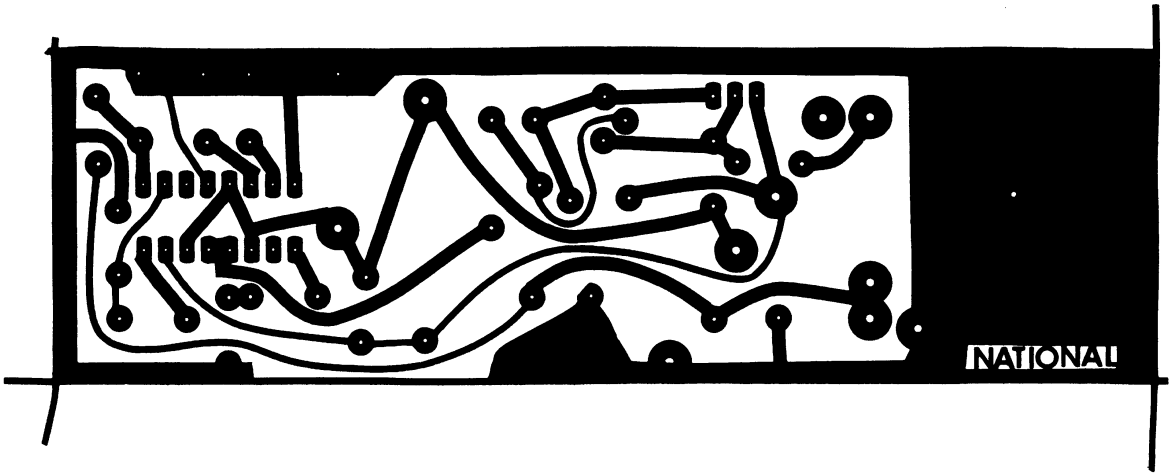


**Figure 26. 5V, 1 Amp Switching Regulator, Foil Side**

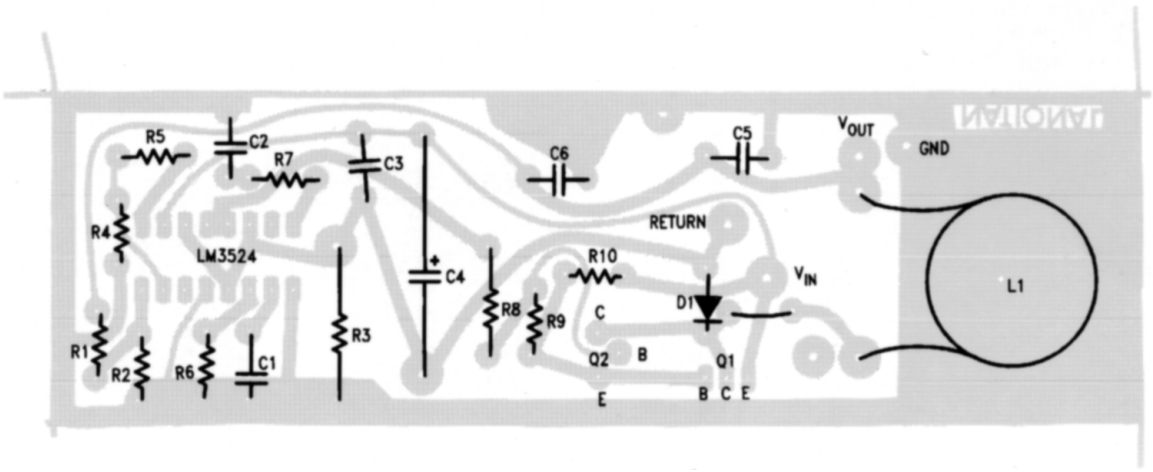


**Figure 27. Stuffing Diagram, Component Side**

### The Step-Up Switching Regulator

Figure 28 shows the basic circuit for a step-up switching regulator. In this circuit Q1 is used as a switch to alternately apply $V_{IN}$ across inductor L1. During the time, $t_{ON}$, Q1 is ON and energy is drawn from $V_{IN}$ and stored in L1; D1 is reverse biased and $I_o$ is supplied from the charge stored in $C_o$. When Q1 opens, $t_{OFF}$, voltage V1 will rise positively to the point where D1 turns ON. The output current is now supplied through L1, D1 to the load and any charge lost from $C_o$ during $t_{ON}$ is replenished. Here also, as in the step-down regulator, the current through L1 has a DC component plus some $\Delta I_L$. $\Delta I_L$ is again selected to be approximately 40% of $I_L$. Figure 29 shows the inductor's current in relation to Q1's ON and OFF times.


Copyright © 2009–2013, Texas Instruments Incorporated

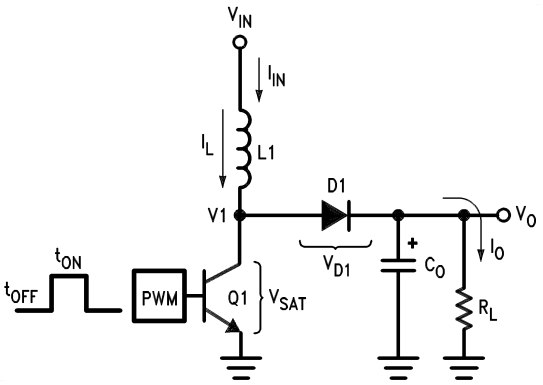


**Figure 28. Basic Step-Up Switching Regulator**

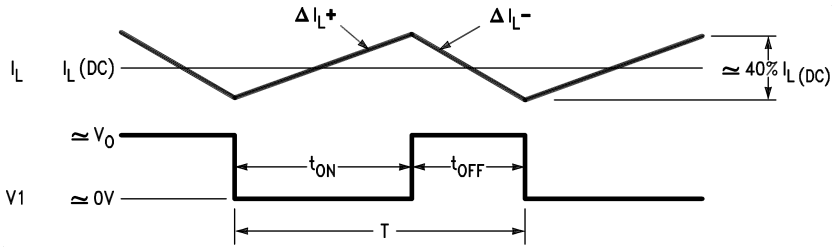


**Figure 29. Relation of Switch Timing to Inductor Current in Step-Up Regulator**

$$\text{From } \Delta I_L = \frac{V_L T}{L},\ \Delta I_L{}^{+} \cong \frac{V_{IN} t_{ON}}{L1}$$

$$\text{and } \Delta I_L{}^{-} \cong \frac{(V_o - V_{IN})\, t_{OFF}}{L1} \tag{16}$$

Since $\Delta I_L+ = \Delta I_L-$, $V_{IN}t_{ON} = V_o t_{OFF} - V_{IN}t_{OFF}$,

and neglecting $V_{SAT}$ and $V_{D1}$

$$\boxed{V_o \cong V_{IN}\left(1 + \frac{t_{ON}}{t_{OFF}}\right)} \tag{17}$$

The above equation shows the relationship between $V_{IN}$, $V_o$ and duty cycle.

In calculating input current $I_{IN(DC)}$, which equals the inductor's DC current, assume first 100% efficiency:

$$P_{IN} = I_{IN(DC)}\, V_{IN}$$

$$P_{OUT} = I_o V_o = I_o\, V_{IN}\left(1 + \frac{t_{ON}}{t_{OFF}}\right) \tag{18}$$

for $\eta = 100\%$, $P_{OUT} = P_{IN}$

$$I_o\, V_{IN}\left(1 + \frac{t_{ON}}{t_{OFF}}\right) = I_{IN(DC)}\, V_{IN}$$

$$I_{IN(DC)} = I_o\left(1 + \frac{t_{ON}}{t_{OFF}}\right) \tag{19}$$

This equation shows that the input, or inductor, current is larger than the output current by the factor ($1 + t_{ON}/t_{OFF}$). Since this factor is the same as the relation between $V_o$ and $V_{IN}$, $I_{IN(DC)}$ can also be expressed as:

$$\boxed{I_{IN(DC)} = I_o\left(\frac{V_o}{V_{IN}}\right)} \tag{20}$$

Copyright © 2009–2013, Texas Instruments Incorporated

So far it is assumed η = 100%, where the actual efficiency or $\eta_{MAX}$ will be somewhat less due to the saturation voltage of Q1 and forward on voltage of D1. The internal power loss due to these voltages is the average $I_L$ current flowing, or $I_{IN}$, through either $V_{SAT}$ or $V_{D1}$. For $V_{SAT} = V_{D1} = 1V$ this power loss becomes $I_{IN(DC)}$ (1V). $\eta_{MAX}$ is then:

$$\eta_{MAX} = \frac{P_O}{P_{IN}} = \frac{V_O I_O}{V_O I_O + I_{IN}\,(1V)} = \frac{V_O I_O}{V_O I_O + I_O\left(1 + \frac{t_{ON}}{t_{OFF}}\right)} \tag{21}$$

$$\text{From } V_o = V_{IN}\left(1 + \frac{t_{ON}}{t_{OFF}}\right)$$

$$\boxed{\eta_{max} = \frac{V_{IN}}{V_{IN} + 1}} \tag{22}$$

This equation assumes only DC losses, however $\eta_{MAX}$ is further decreased because of the switching time of Q1 and D1.

In calculating the output capacitor $C_o$ it can be seen that $C_o$ supplies $I_o$ during $t_{ON}$. The voltage change on $C_o$ during this time will be some $\Delta V_c = \Delta V_o$ or the output ripple of the regulator. Calculation of $C_o$ is:

$$\Delta V_o = \frac{I_o t_{ON}}{C_o} \text{ or } C_o = \frac{I_o t_{ON}}{\Delta V_o}$$

$$\text{From } V_o = V_{IN}\left(\frac{T}{t_{OFF}}\right);\ t_{OFF} = \frac{V_{IN}}{V_o} T$$

$$\text{where } T = t_{ON} + t_{OFF} = \frac{1}{f}$$

$$t_{ON} = T - \frac{V_{IN}}{V_o} T = T\left(\frac{V_o - V_{IN}}{V_o}\right) \text{ therefore:}$$

$$C_o = \frac{I_o T\left(\frac{V_o - V_{IN}}{V_o}\right)}{\Delta V_o} = \boxed{\frac{I_o\,(V_o - V_{IN})}{f \Delta V_o V_o}} \tag{23}$$

where: $C_o$ is in farads, f is the switching frequency,

$\Delta V_o$ is the p-p output ripple

Calculation of inductor L1 is as follows:

$$L1 = \frac{V_{IN} t_{ON}}{\Delta I_L}, \text{ since during } t_{ON}, \tag{24}$$

$V_{IN}$ is applied across L1

$$\Delta I_{Lp\text{-}p} = 0.4\, I_L = 0.41\, I_{IN} = 0.4\, I_o\left(\frac{V_o}{V_{IN}}\right), \text{ therefore:}$$

$$L1 = \frac{V_{IN} t_{ON}}{0.4\, I_o\left(\frac{V_o}{V_{IN}}\right)} \text{ and since } t_{ON} = \frac{T\,(V_o - V_{IN})}{V_o}$$

$$\boxed{L1 = \frac{2.5\, V_{IN}^2\,(V_o - V_{IN})}{f\, I_o V_o^2}} \tag{25}$$

where: L1 is in henrys, f is the switching frequency in Hz

To apply the above theory, a complete step-up switching regulator is shown in Figure 30. Since $V_{IN}$ is 5V, $V_{REF}$ is tied to $V_{IN}$. The input voltage is divided by 2 to bias the error amplifier's inverting input. The output voltage is:

$$V_{OUT} = \left(1 + \frac{R2}{R1}\right) \times V_{INV} = 2.5 \times \left(1 + \frac{R2}{R1}\right) \tag{26}$$

The network D1, C1 forms a slow start circuit.


Copyright © 2009–2013, Texas Instruments Incorporated

This holds the output of the error amplifier initially low thus reducing the duty-cycle to a minimum. Without the slow start circuit the inductor may saturate at turn-on because it has to supply high peak currents to charge the output capacitor from 0V. It should also be noted that this circuit has no supply rejection. By adding a reference voltage at the non-inverting input to the error amplifier, see Figure 31, the input voltage variations are rejected.

The LM3524D can also be used in inductorless switching regulators. Figure 32 shows a polarity inverter which if connected to Figure 30 provides a −15V unregulated output.

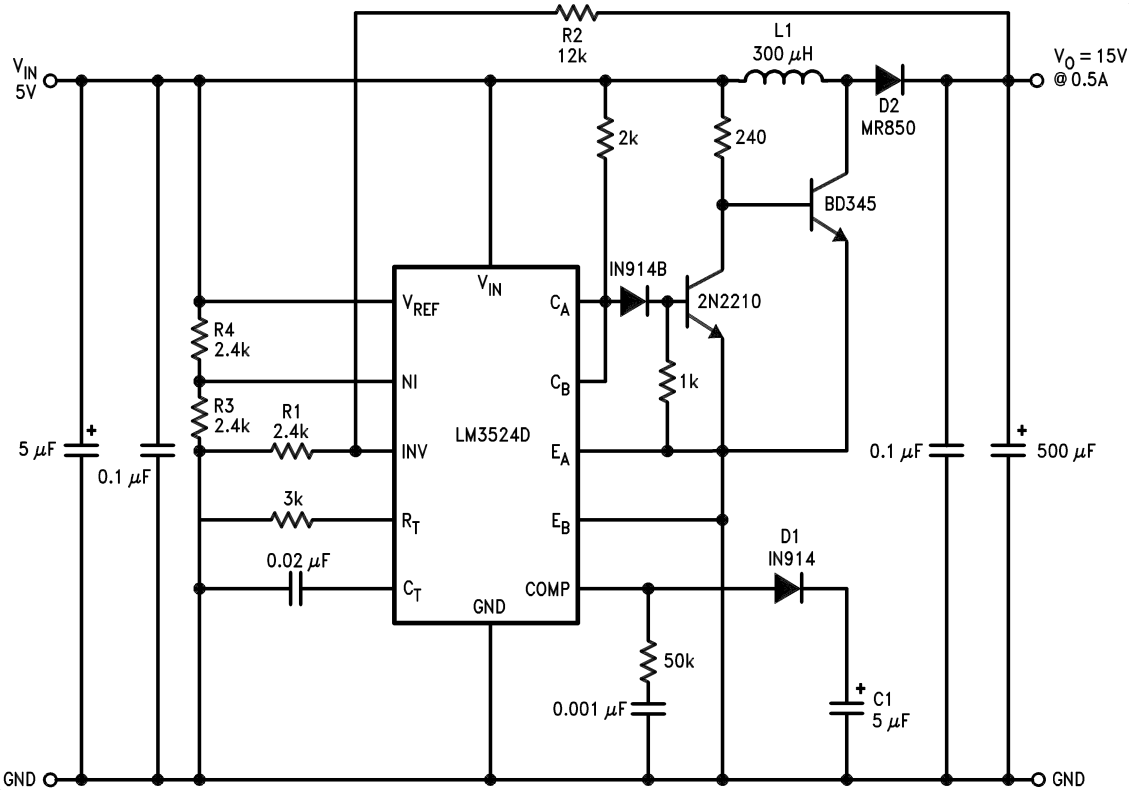


L1 = > 25 turns No. 24 wire on Ferroxcube No. K300502 Toroid core.

**Figure 30. 15V, 0.5A Step-Up Switching Regulator**

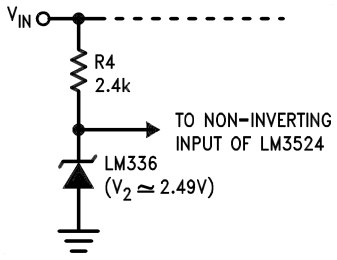


**Figure 31. Replacing R3/R4 Divider in Figure 30 with Reference Circuit Improves Line Regulation**

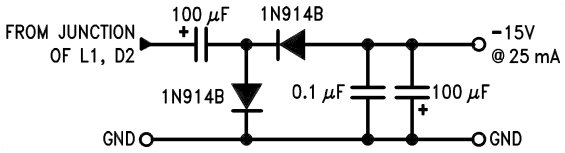


**Figure 32. Polarity Inverter Provides Auxiliary −15V Unregulated Output from Circuit of Figure 30**

## REVISION HISTORY

| Changes from Revision D (May 2013) to Revision E | Page |
|---|---|
| • Changed layout of National Data Sheet to TI format | 21 |


Copyright © 2009–2013, Texas Instruments Incorporated

## PACKAGING INFORMATION

| Orderable Device | Status (1) | Package Type | Package Drawing | Pins | Package Qty | Eco Plan (2) | Lead/Ball Finish (6) | MSL Peak Temp (3) | Op Temp (°C) | Device Marking (4/5) | Samples |
|---|---|---|---|---|---|---|---|---|---|---|---|
| LM2524DN/NOPB | ACTIVE | PDIP | NFG | 16 | 25 | Pb-Free (RoHS) | CU SN | Level-1-NA-UNLIM | -40 to 125 | LM2524DN | Samples |
| LM3524DM/NOPB | ACTIVE | SOIC | D | 16 | 48 | Green (RoHS & no Sb/Br) | CU SN | Level-1-260C-UNLIM | 0 to 125 | LM3524DM | Samples |
| LM3524DMX/NOPB | ACTIVE | SOIC | D | 16 | 2500 | Green (RoHS & no Sb/Br) | CU SN | Level-1-260C-UNLIM | 0 to 125 | LM3524DM | Samples |
| LM3524DN/NOPB | ACTIVE | PDIP | NFG | 16 | 25 | Green (RoHS & no Sb/Br) | CU SN | Level-1-NA-UNLIM | 0 to 125 | LM3524DN | Samples |

**(1)** The marketing status values are defined as follows:
**ACTIVE:** Product device recommended for new designs.
**LIFEBUY:** TI has announced that the device will be discontinued, and a lifetime-buy period is in effect.
**NRND:** Not recommended for new designs. Device is in production to support existing customers, but TI does not recommend using this part in a new design.
**PREVIEW:** Device has been announced but is not in production. Samples may or may not be available.
**OBSOLETE:** TI has discontinued the production of the device.

**(2)** **RoHS:** TI defines "RoHS" to mean semiconductor products that are compliant with the current EU RoHS requirements for all 10 RoHS substances, including the requirement that RoHS substance do not exceed 0.1% by weight in homogeneous materials. Where designed to be soldered at high temperatures, "RoHS" products are suitable for use in specified lead-free processes. TI may reference these types of products as "Pb-Free".
**RoHS Exempt:** TI defines "RoHS Exempt" to mean products that contain lead but are compliant with EU RoHS pursuant to a specific EU RoHS exemption.
**Green:** TI defines "Green" to mean the content of Chlorine (Cl) and Bromine (Br) based flame retardants meet JS709B low halogen requirements of <=1000ppm threshold. Antimony trioxide based flame retardants must also meet the <=1000ppm threshold requirement.

**(3)** MSL, Peak Temp. - The Moisture Sensitivity Level rating according to the JEDEC industry standard classifications, and peak solder temperature.

**(4)** There may be additional marking, which relates to the logo, the lot trace code information, or the environmental category on the device.

**(5)** Multiple Device Markings will be inside parentheses. Only one Device Marking contained in parentheses and separated by a "~" will appear on a device. If a line is indented then it is a continuation of the previous line and the two combined represent the entire Device Marking for that device.

**(6)** Lead/Ball Finish - Orderable Devices may have multiple material finish options. Finish options are separated by a vertical ruled line. Lead/Ball Finish values may wrap to two lines if the finish value exceeds the maximum column width.

**Important Information and Disclaimer:**The information provided on this page represents TI's knowledge and belief as of the date that it is provided. TI bases its knowledge and belief on information provided by third parties, and makes no representation or warranty as to the accuracy of such information. Efforts are underway to better integrate information from third parties. TI has taken and

continues to take reasonable steps to provide representative and accurate information but may not have conducted destructive testing or chemical analysis on incoming materials and chemicals.
TI and TI suppliers consider certain information to be proprietary, and thus CAS numbers and other limited information may not be available for release.

In no event shall TI's liability arising out of such information exceed the total purchase price of the TI part(s) at issue in this document sold by TI to Customer on an annual basis.

## TAPE AND REEL INFORMATION

**REEL DIMENSIONS**

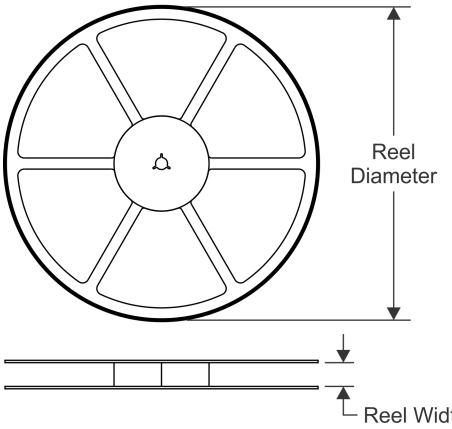


**TAPE DIMENSIONS**

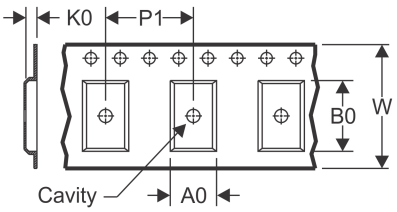


| | |
|---|---|
| A0 | Dimension designed to accommodate the component width |
| B0 | Dimension designed to accommodate the component length |
| K0 | Dimension designed to accommodate the component thickness |
| W | Overall width of the carrier tape |
| P1 | Pitch between successive cavity centers |

**QUADRANT ASSIGNMENTS FOR PIN 1 ORIENTATION IN TAPE**

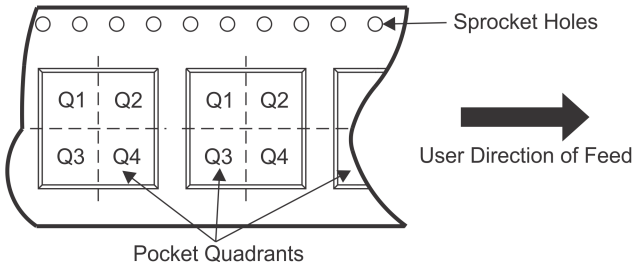


*All dimensions are nominal

| Device | Package Type | Package Drawing | Pins | SPQ | Reel Diameter (mm) | Reel Width W1 (mm) | A0 (mm) | B0 (mm) | K0 (mm) | P1 (mm) | W (mm) | Pin1 Quadrant |
|---|---|---|---|---|---|---|---|---|---|---|---|---|
| LM3524DMX/NOPB | SOIC | D | 16 | 2500 | 330.0 | 16.4 | 6.5 | 10.3 | 2.3 | 8.0 | 16.0 | Q1 |

TAPE AND REEL BOX DIMENSIONS

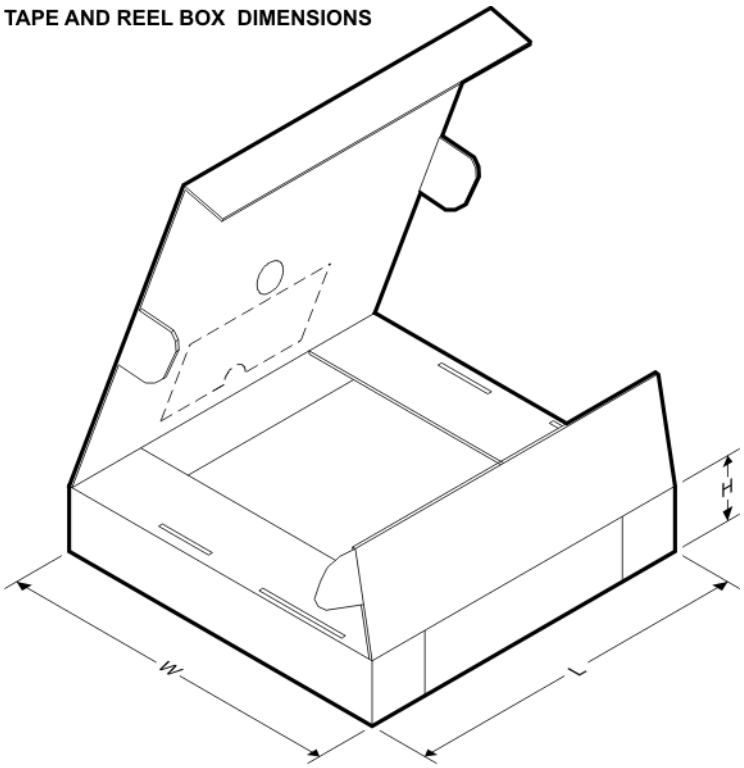


*All dimensions are nominal

| Device | Package Type | Package Drawing | Pins | SPQ | Length (mm) | Width (mm) | Height (mm) |
|---|---|---|---|---|---|---|---|
| LM3524DMX/NOPB | SOIC | D | 16 | 2500 | 367.0 | 367.0 | 35.0 |

NFG0016E

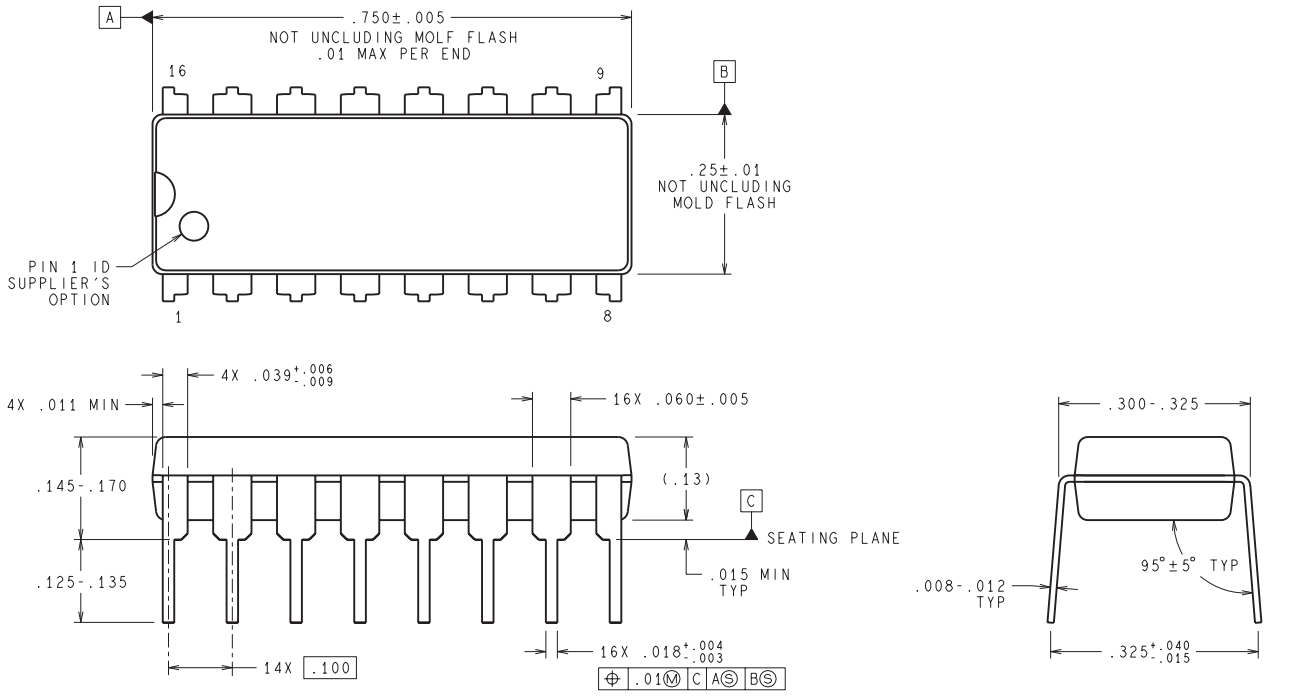


DIMENSIONS ARE IN INCHES
DIMENSIONS IN ( ) FOR REFERENCE ONLY

N16E (Rev G)

D (R–PDSO–G16) PLASTIC SMALL OUTLINE

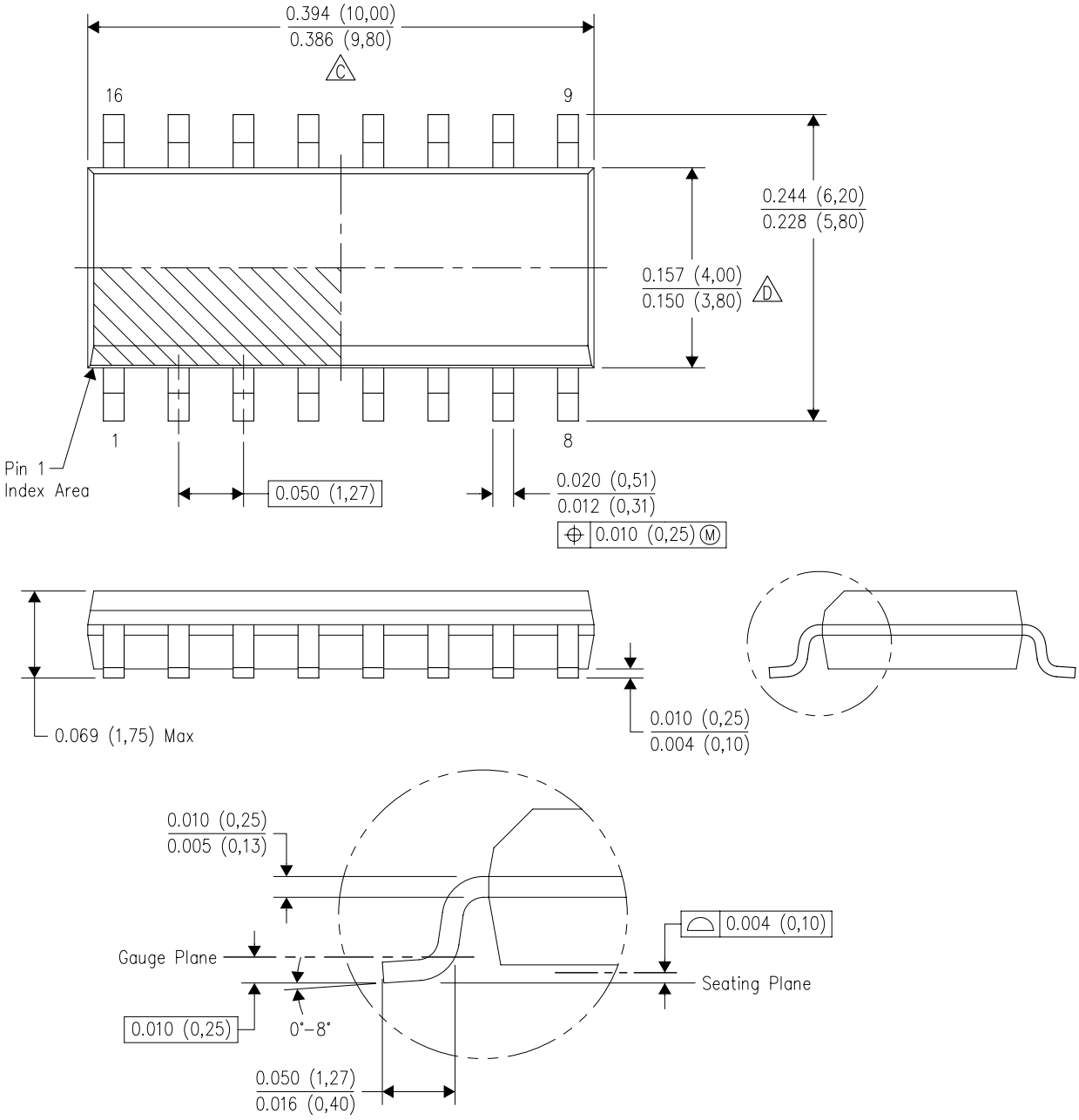


NOTES:
A. All linear dimensions are in inches (millimeters).
B. This drawing is subject to change without notice.
C. Body length does not include mold flash, protrusions, or gate burrs. Mold flash, protrusions, or gate burrs shall not exceed 0.006 (0,15) each side.
D. Body width does not include interlead flash. Interlead flash shall not exceed 0.017 (0,43) each side.
E. Reference JEDEC MS–012 variation AC.

## IMPORTANT NOTICE

Texas Instruments Incorporated (TI) reserves the right to make corrections, enhancements, improvements and other changes to its semiconductor products and services per JESD46, latest issue, and to discontinue any product or service per JESD48, latest issue. Buyers should obtain the latest relevant information before placing orders and should verify that such information is current and complete.

TI's published terms of sale for semiconductor products (http://www.ti.com/sc/docs/stdterms.htm) apply to the sale of packaged integrated circuit products that TI has qualified and released to market. Additional terms may apply to the use or sale of other types of TI products and services.

Reproduction of significant portions of TI information in TI data sheets is permissible only if reproduction is without alteration and is accompanied by all associated warranties, conditions, limitations, and notices. TI is not responsible or liable for such reproduced documentation. Information of third parties may be subject to additional restrictions. Resale of TI products or services with statements different from or beyond the parameters stated by TI for that product or service voids all express and any implied warranties for the associated TI product or service and is an unfair and deceptive business practice. TI is not responsible or liable for any such statements.

Buyers and others who are developing systems that incorporate TI products (collectively, "Designers") understand and agree that Designers remain responsible for using their independent analysis, evaluation and judgment in designing their applications and that Designers have full and exclusive responsibility to assure the safety of Designers' applications and compliance of their applications (and of all TI products used in or for Designers' applications) with all applicable regulations, laws and other applicable requirements. Designer represents that, with respect to their applications, Designer has all the necessary expertise to create and implement safeguards that (1) anticipate dangerous consequences of failures, (2) monitor failures and their consequences, and (3) lessen the likelihood of failures that might cause harm and take appropriate actions. Designer agrees that prior to using or distributing any applications that include TI products, Designer will thoroughly test such applications and the functionality of such TI products as used in such applications.

TI's provision of technical, application or other design advice, quality characterization, reliability data or other services or information, including, but not limited to, reference designs and materials relating to evaluation modules, (collectively, "TI Resources") are intended to assist designers who are developing applications that incorporate TI products; by downloading, accessing or using TI Resources in any way, Designer (individually or, if Designer is acting on behalf of a company, Designer's company) agrees to use any particular TI Resource solely for this purpose and subject to the terms of this Notice.

TI's provision of TI Resources does not expand or otherwise alter TI's applicable published warranties or warranty disclaimers for TI products, and no additional obligations or liabilities arise from TI providing such TI Resources. TI reserves the right to make corrections, enhancements, improvements and other changes to its TI Resources. TI has not conducted any testing other than that specifically described in the published documentation for a particular TI Resource.

Designer is authorized to use, copy and modify any individual TI Resource only in connection with the development of applications that include the TI product(s) identified in such TI Resource. NO OTHER LICENSE, EXPRESS OR IMPLIED, BY ESTOPPEL OR OTHERWISE TO ANY OTHER TI INTELLECTUAL PROPERTY RIGHT, AND NO LICENSE TO ANY TECHNOLOGY OR INTELLECTUAL PROPERTY RIGHT OF TI OR ANY THIRD PARTY IS GRANTED HEREIN, including but not limited to any patent right, copyright, mask work right, or other intellectual property right relating to any combination, machine, or process in which TI products or services are used. Information regarding or referencing third-party products or services does not constitute a license to use such products or services, or a warranty or endorsement thereof. Use of TI Resources may require a license from a third party under the patents or other intellectual property of the third party, or a license from TI under the patents or other intellectual property of TI.

TI RESOURCES ARE PROVIDED "AS IS" AND WITH ALL FAULTS. TI DISCLAIMS ALL OTHER WARRANTIES OR REPRESENTATIONS, EXPRESS OR IMPLIED, REGARDING RESOURCES OR USE THEREOF, INCLUDING BUT NOT LIMITED TO ACCURACY OR COMPLETENESS, TITLE, ANY EPIDEMIC FAILURE WARRANTY AND ANY IMPLIED WARRANTIES OF MERCHANTABILITY, FITNESS FOR A PARTICULAR PURPOSE, AND NON-INFRINGEMENT OF ANY THIRD PARTY INTELLECTUAL PROPERTY RIGHTS. TI SHALL NOT BE LIABLE FOR AND SHALL NOT DEFEND OR INDEMNIFY DESIGNER AGAINST ANY CLAIM, INCLUDING BUT NOT LIMITED TO ANY INFRINGEMENT CLAIM THAT RELATES TO OR IS BASED ON ANY COMBINATION OF PRODUCTS EVEN IF DESCRIBED IN TI RESOURCES OR OTHERWISE. IN NO EVENT SHALL TI BE LIABLE FOR ANY ACTUAL, DIRECT, SPECIAL, COLLATERAL, INDIRECT, PUNITIVE, INCIDENTAL, CONSEQUENTIAL OR EXEMPLARY DAMAGES IN CONNECTION WITH OR ARISING OUT OF TI RESOURCES OR USE THEREOF, AND REGARDLESS OF WHETHER TI HAS BEEN ADVISED OF THE POSSIBILITY OF SUCH DAMAGES.

Unless TI has explicitly designated an individual product as meeting the requirements of a particular industry standard (e.g., ISO/TS 16949 and ISO 26262), TI is not responsible for any failure to meet such industry standard requirements.

Where TI specifically promotes products as facilitating functional safety or as compliant with industry functional safety standards, such products are intended to help enable customers to design and create their own applications that meet applicable functional safety standards and requirements. Using products in an application does not by itself establish any safety features in the application. Designers must ensure compliance with safety-related requirements and standards applicable to their applications. Designer may not use any TI products in life-critical medical equipment unless authorized officers of the parties have executed a special contract specifically governing such use. Life-critical medical equipment is medical equipment where failure of such equipment would cause serious bodily injury or death (e.g., life support, pacemakers, defibrillators, heart pumps, neurostimulators, and implantables). Such equipment includes, without limitation, all medical devices identified by the U.S. Food and Drug Administration as Class III devices and equivalent classifications outside the U.S.

TI may expressly designate certain products as completing a particular qualification (e.g., Q100, Military Grade, or Enhanced Product). Designers agree that it has the necessary expertise to select the product with the appropriate qualification designation for their applications and that proper product selection is at Designers' own risk. Designers are solely responsible for compliance with all legal and regulatory requirements in connection with such selection.

Designer will fully indemnify TI and its representatives against any damages, costs, losses, and/or liabilities arising out of Designer's non-compliance with the terms and provisions of this Notice.

Mailing Address: Texas Instruments, Post Office Box 655303, Dallas, Texas 75265
Copyright © 2018, Texas Instruments Incorporated